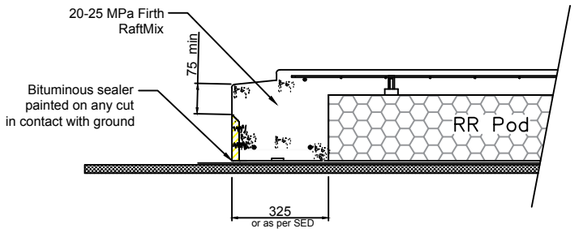

2 Garage door step CONSTRUCTION DETAIL

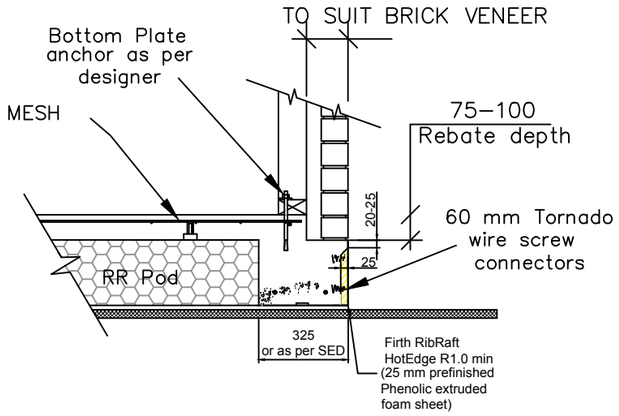

3 BRICK VENEER CONSTRUCTION DETAIL

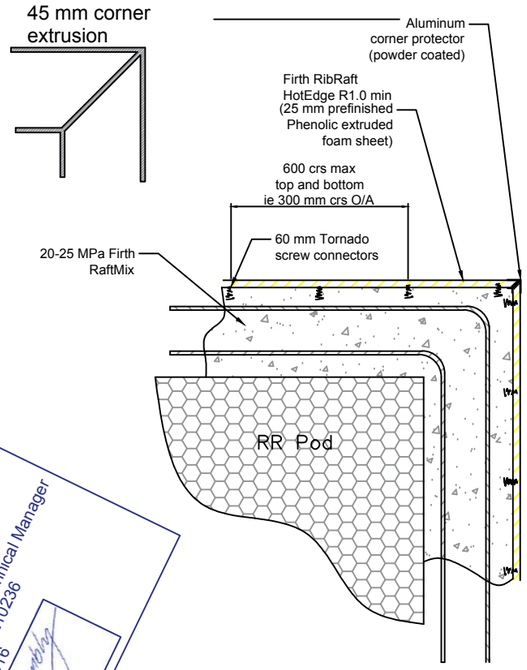

4 Plan–external corner CONSTRUCTION DETAIL

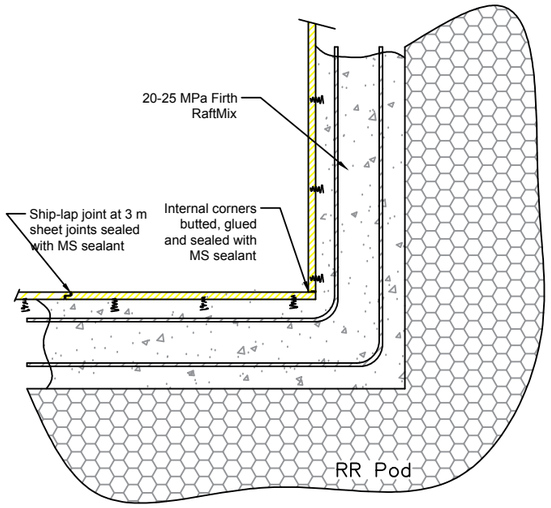

5 Plan–Internal corner CONSTRUCTION DETAIL

Approved for Construction
JL Hambling, National Technical Manager
CPENG, MIPENZ, #210236
April 2016

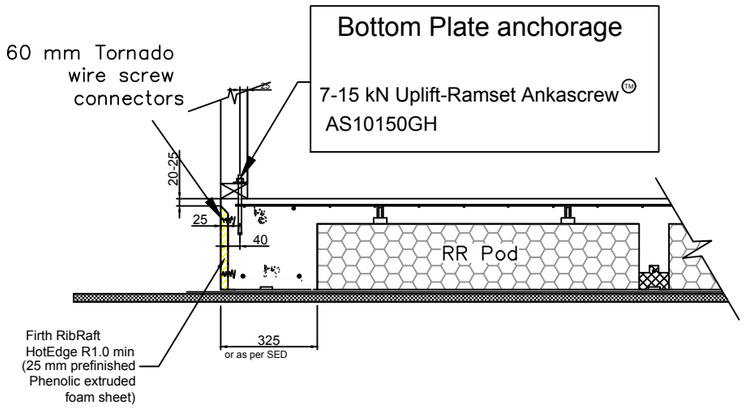

1 CLAD FRAME CONSTRUCTION DETAIL

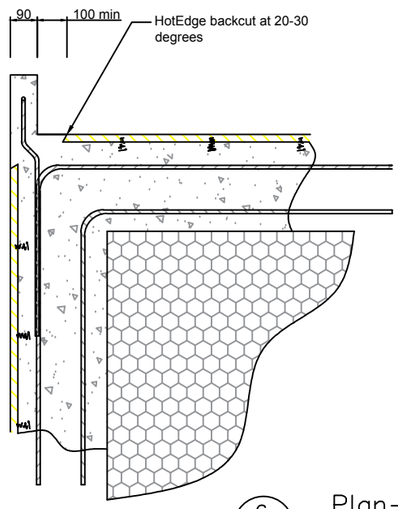

6 Plan–wing wall CONSTRUCTION DETAIL

RibRaft HotEdge System Notes

-RibRaft HotEdge® is a pre mesh/plastered foundation edge insulation system. For optimum service life and insulation, 2 coats of acrylic paint should be maintained to all exposed surfaces.
-The insulation of HotEdgeR® has been modeled by BRANZ and shown to provide minimum R1.0 to the full depth edge beam of Firth RibRaft® floors

-For overall RibRaft R value calculation with HotEdge®, refer BRANZ publication 'Home Insulation Guide', 5th Edition, 'R=1.0 to perimeter edge beam for waffle pod floor'

-HotEdge® has been designed to be incorporated with RibRaft CodeMark™ Technical Manual 2012. Inclusion in specifically engineered floor systems must be checked and approved by CPeng, while using standard RibRaft® details and materials/components (ie Firth 20/25 MPa RaftMix®)

RIBRAFT FLOORS

Firth

Firth RibRaft® HotEdge® Details

SHEET TITLE: TIMBER FRAME CONSTRUCTION DETAILS

DESIGNED: JLH | DRAWN: JLH
CHECKED: | CAD DWG.:
SCALES: NTS | DATE: 2016

DWG NO. S130–1