F1A

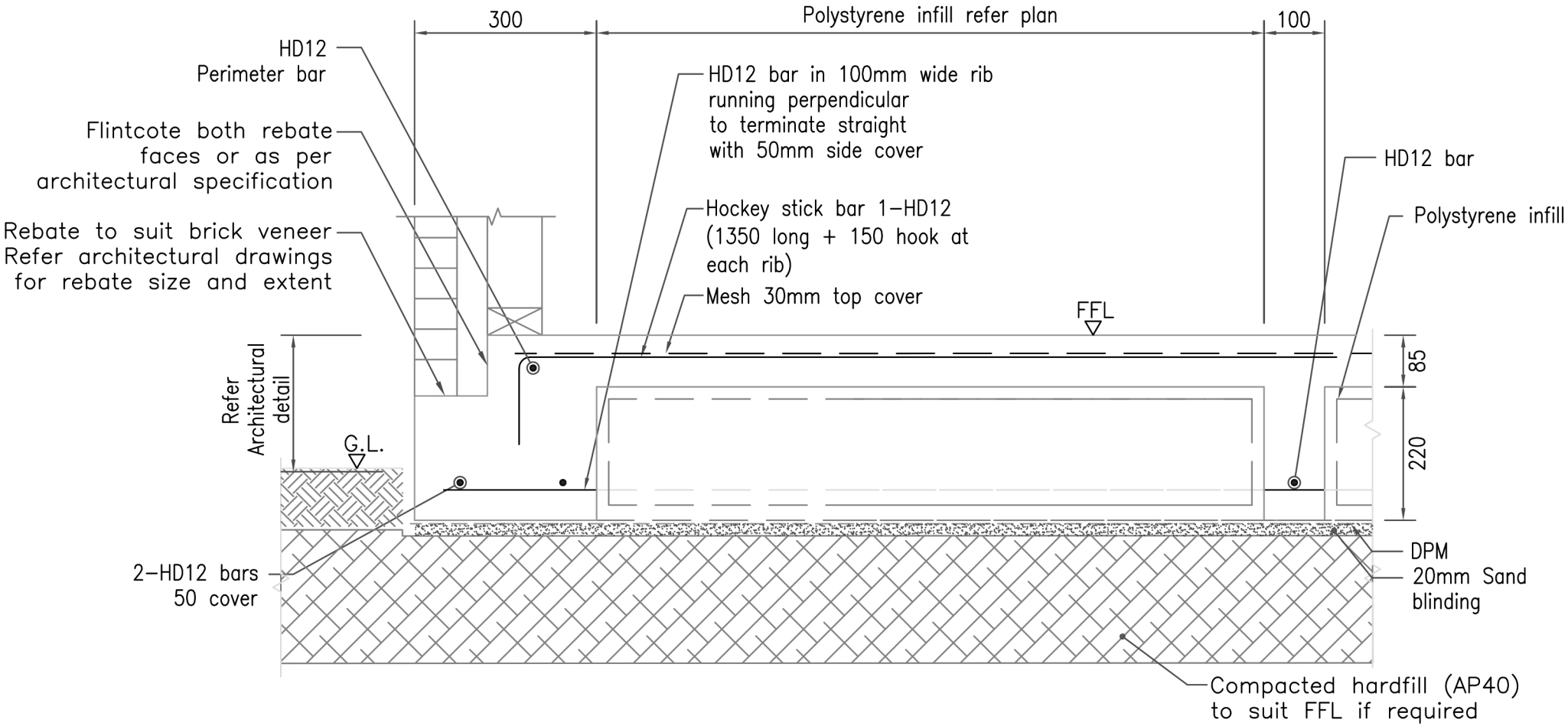
300
Polystyrene infill refer plan
100
HD12
Perimeter bar
Flintcote both rebate faces or as per architectural specification
Rebate to suit brick veneer Refer architectural drawings for rebate size and extent
HD12 bar in 100mm wide rib running perpendicular to terminate straight with 50mm side cover
Hockey stick bar 1–HD12 (1350 long + 150 hook at each rib)
Mesh 30mm top cover
HD12 bar
Polystyrene infill
FFL
85
220
Refer Architectural detail
G.L.
2–HD12 bars 50 cover
DPM
20mm Sand blinding
Compacted hardfill (AP40) to suit FFL if required